PI Middle East
PROFIBUS • PROFINET

The use of Profibus in the Food & Beverage Industry

Presented by Lassad Drissi, Sr. Engineer, 3W Technomatic

3w technomatic | Engineering the future

Profibus in the Food & Beverage Industry

Successful Factory

- Low Investment
- High Quality
- Quick Setup
- Low down time (MTTR)
- Low production cost
- Safe production

Profibus in the Food & Beverage Industry

- Benefits of using Profibus
- Case Study

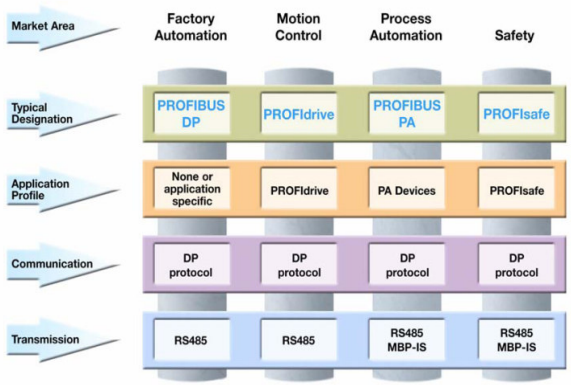

Profibus in the Food & Beverage Industry

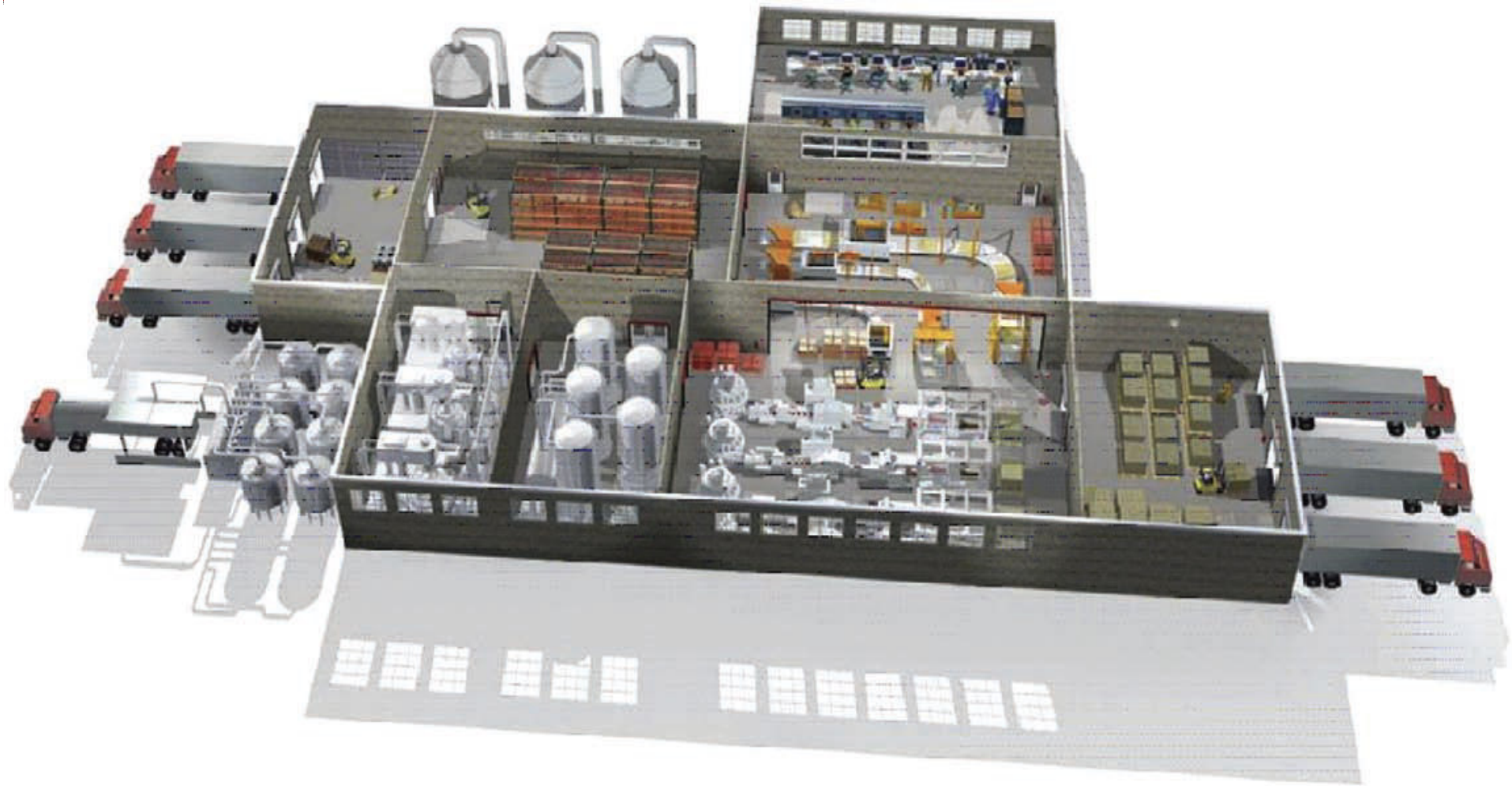

3w technomatic | Engineering the Future

Benefits of using Profibus?

- Engineering cost ↓
- Procurement cost ↓
- Integration cost ↓
- Installation cost ↓
- Commissioning cost ↓
- Maintenance cost ↓

- Flexibility ↑
- Availability ↑
- Quality ↑

Engineering Cost

Cable list

			Replaces		Project name	Prepared	23.01.20 02 VPP	Responsible department	ABB Oy	Title
			Replaced by			Approved	Pasi Nisula	Take over department	ABB Oy	
			Based on							
Rev	Comment	Revised	Doc design			ABB Oy		File:	E01_LUS_KBA_010	Project Doc No E01-LUS-KBA-012

Customer Ref. No XXX-XXX-XXX-XXX-

DATABASE							SUB STATION RTU 211															SWITCHGEAR				
							BLOCK ADDRESS			RACK	MOD	CARD	INTERPOSING RELAY				WIRING			CABLE			FEEDER	
										0	1	1														
ID = LN	TEXT = OI				FUNCTION	No		TYPE DB	BLOCK		23 IO 96															
	S/S	BAY		DEV.					1		Chann	Term	Wire	Term	Relay	Term	Wire	Chain addr.	Term.	Wire	Number	Wire	Term.	Remarks
KBA_PC	KBA	S/S Pulse Counters		PC	PULS COUNTER 1	1		SI	0		CH 1	X7:9	0,75	14	K101	A1	0,75		1					
														● 11		A2 ●		4	2					
KBA_PC	KBA	S/S Pulse Counters		PC	PULS COUNTER 2	2		SI	1		CH 2	X7:8	0,75	14	K102	A1	0,75		3					
														● 11		A2 ●		6	4					
KBAALARM1	KBA	S/S Common Alarms		RTU	Supervisory enabled	3		SI	2		CH 3	X7:7	0,75	14	K103	A1	0,75		5	0,75	RTU INTERNAL S1 :33			
														● 11		A2 ●		8	6	0,75	RTU INTERNAL S1 :34			
KBAALARM1	KBA	S/S Common Alarms		RTU	RTU 220VAC Supply fault	4		SI	3		CH 4	X7:6	0,75	14	K104	A1	0,75		7	0,75	RTU INTERNAL F101:13			
														● 11		A2 ●		10	8	0,75	RTU INTERNAL F101:14			
KBAALARM1	KBA	S/S Common Alarms		RTU	RTU 110 VDC Supply fault	5		SI	4		CH 5	X7:5	0,75	14	K105	A1	0,75		9	0,75	RTU INTERNAL F941:13			
														● 11		A2 ●		12	10	0,75	RTU INTERNAL F941:14			
KBAALARM3	KBA	S/S Common Alarms		RTU	Access Control	6		SI	5		CH 6	X7:4	0,75	14	K106	A1	0,75		11	1	100-W6	1	1	
														● 11		A2 ●		14	12	2	S/S DOOR SWITCH	2	2	
KBAALARM1	KBA	S/S Common Alarms		RTU	AC Fault	7		SI	6		CH 7	X7:3	0,75	14	K107	A1	0,75		13	1	100-W7	1	93	
														● 11		A2 ●		16	14	2	AC BOARD	2	94	
KBAALARM1	KBA	S/S Common Alarms		RTU	110V DC RTU Supply Fail	8		SI	7		CH 8	X7:2	0,75	12	K108	A1	0,75		15	2	100-W9	2	91	
														● 11		A2 ●		18	16	1	DC board/charger	1	92	&9
KBAALARM1	KBA	S/S Common Alarms		RTU	110V DC Charger Supply Fail	9		SI	8		CH 9	X6:8	0,75	14	K109	A1	0,75		17	3		3	93	
														● 11		A2 ●		20	18					
KBAALARM1	KBA	S/S Common Alarms		RTU	220V AC Charger Supply	10		SI	9		CH 10	X6:7	0,75	14	K110	A1	0,75		19					
														● 11		A2 ●		22	20					
KBAALARM2	KBA	S/S Common Alarms		RTU	110VDC fault 33kV	11		SI	10		CH 11	X6:6	0,75	14	K111	A1	0,75		21					
														● 11		A2 ●		24	22					
KBAALARM1	KBA	S/S Common Alarms		RTU	48VDC fault	12		SI	11		CH 12	X6:5	0,75	14	K112	A1	0,75		23					
														● 11		A2 ●		26	24					
KBAX	KBA	S/S Common Alarms			Spare	13		SI	12		CH 13	X6:4	0,75	14	K113	A1	0,75		25					
														● 11		A2 ●		28	26					
KBAX	KBA	S/S Common Alarms			Spare	14		SI	13		CH 14	X6:3	0,75	14	K114	A1	0,75		27					
														● 11		A2 ●		30	28					
KBAX	KBA	S/S Common Alarms			Spare	15		SI	14		CH 15	X6:2	0,75	14	K115	A1	0,75		29					
														● 11		A2 ●		32	30					
KBAX	KBA	S/S Common Alarms			Spare	16		SI	15		CH 16	X6:1	0,75	14	K116	A1	0,75		31					
														● 11		A2 ●		42	32					

Engineering Cost

Loop Diagram

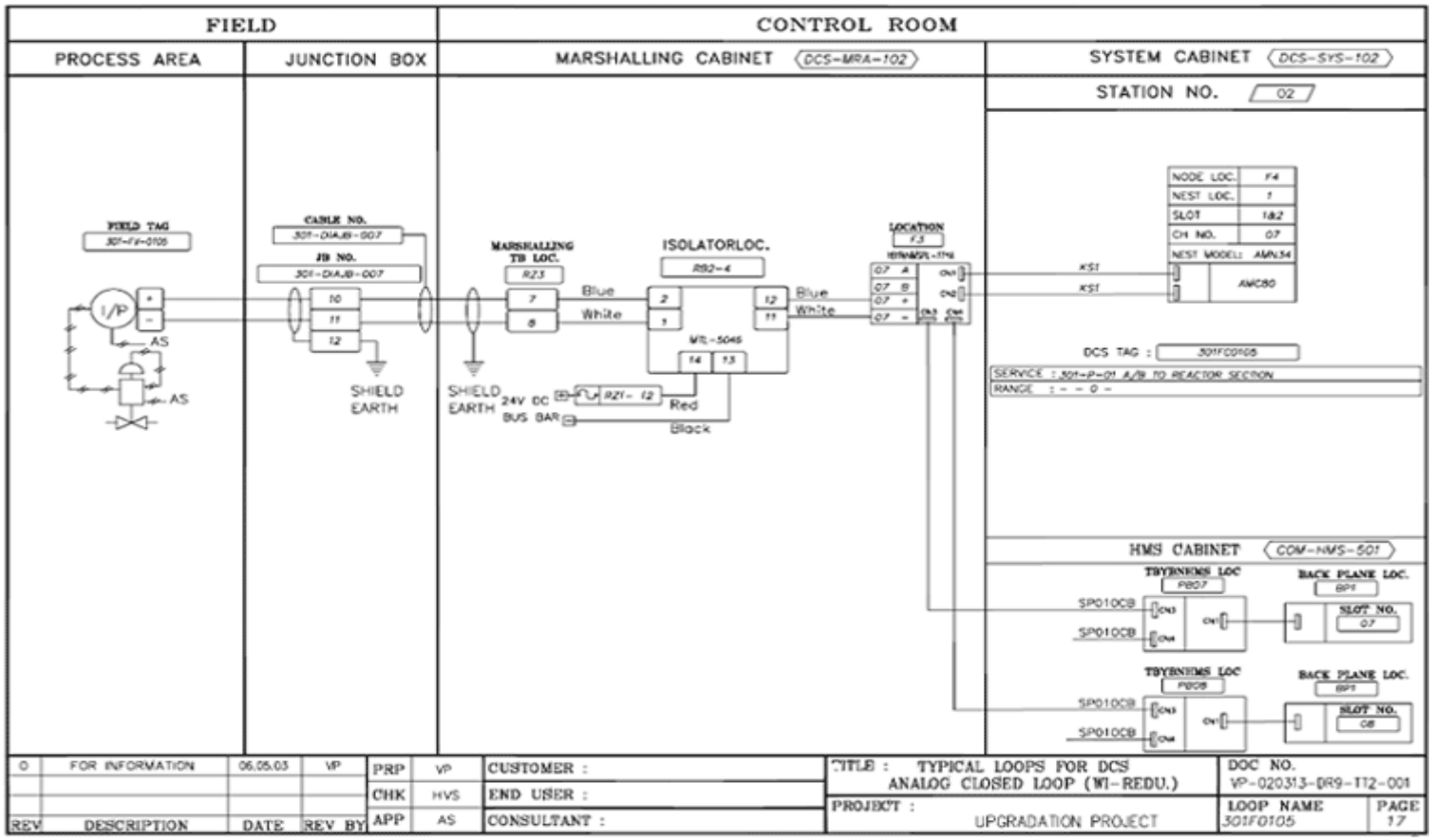

Procurement Cost

Hardwired solution

Profibus

Less HW I/O → Less I/O cards → Less Terminals → Less cables → Less Labels → Less cable tray

Integration Cost

Marshalling

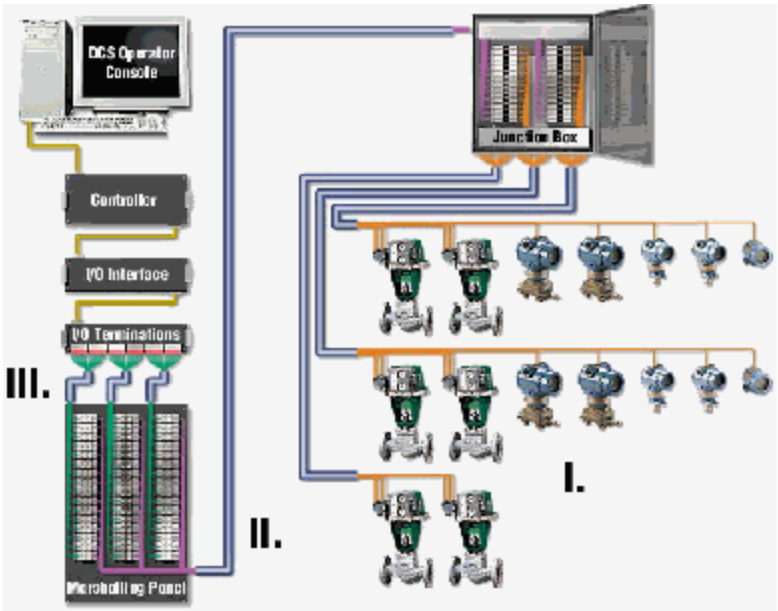

Less HW I/O→Less Termination→Less Labeling→Less marchalling→More space

Installation Cost

Cable laying

Hardwired Signals

Profibus Signals

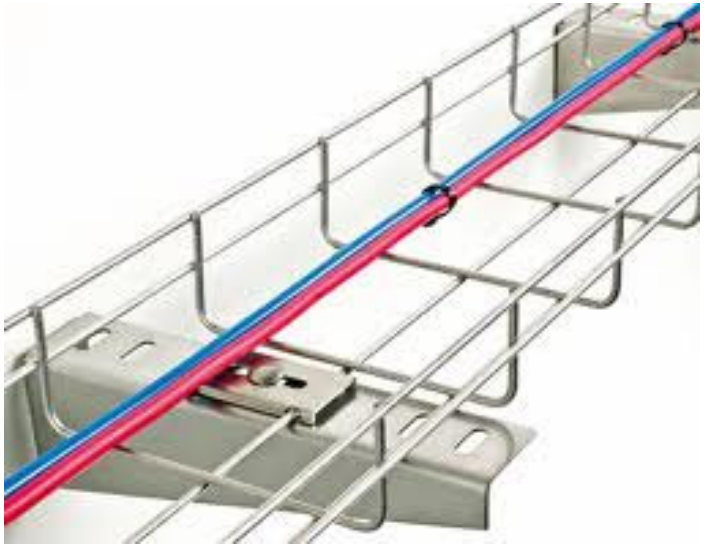

Less cables→Less cables tray→Less installation Time

Commissioning Cost

Less Loop testing

Maintenance Cost

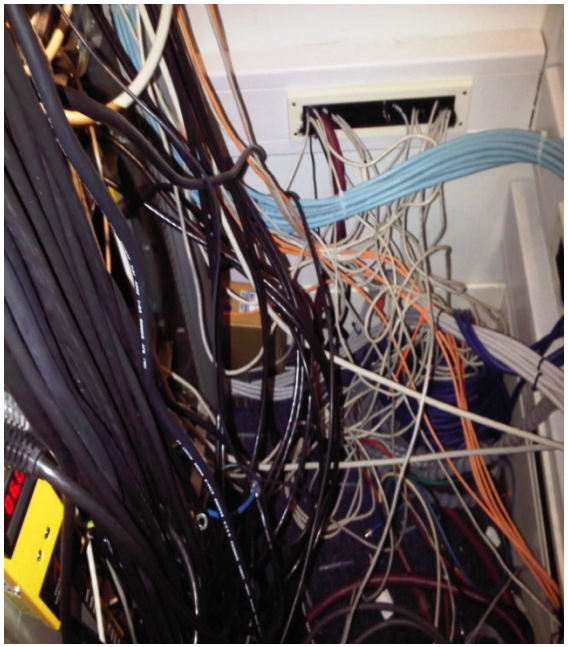

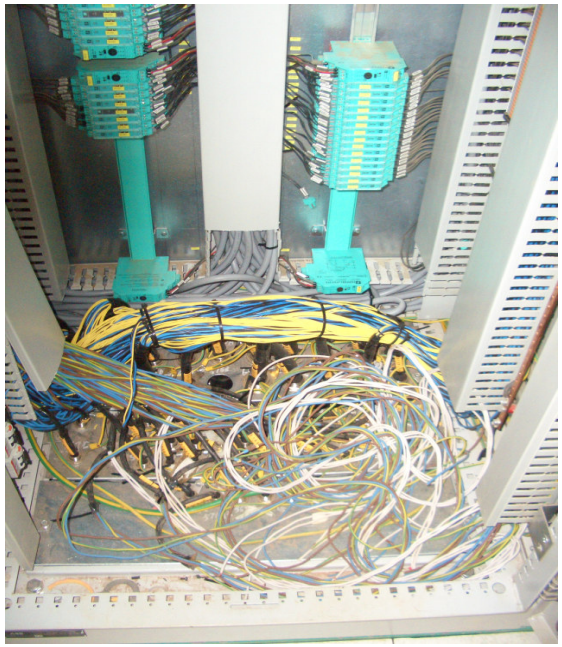

Less HW →Less cables→Less termination→Less Fuse→More space→ quick diagnostic

Flexibility

Relocation /Replacement/Extension

Less HW →Less cables→Less termination→quick rerooting→quick connection →Less down time→More production

Availability

Redundant Controller/Network

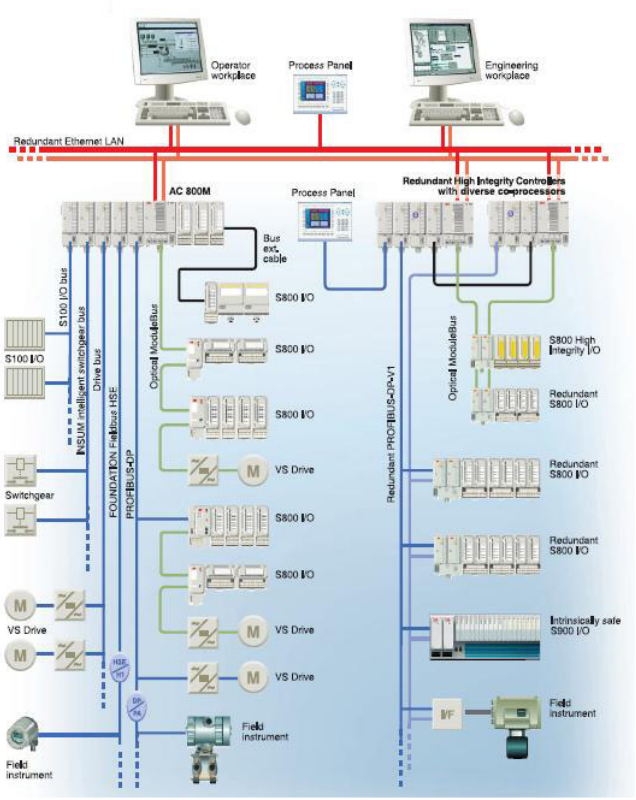

Quality

Self diagnostic → Preventive maintenance

Online monitoring → Detect failure on time

Online calibration → Repeatability

Case Study

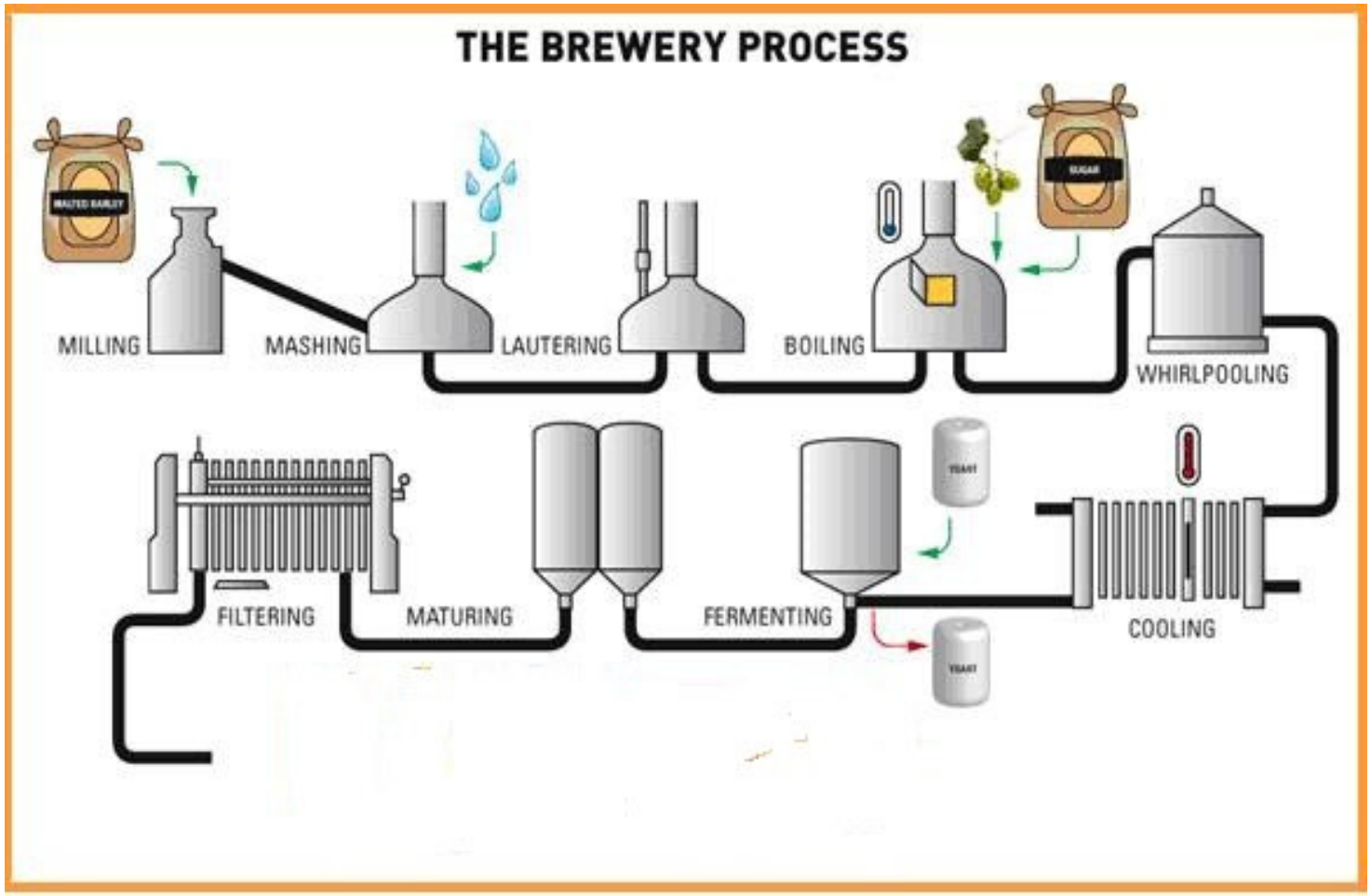
THE BREWERY PROCESS
MILLING
MASHING
LAUTERING
BOILING
WHIRLPOOLING
FILTERING
MATURING
FERMENTING
COOLING

Case Study

HW solution Quantities

- →50 Instruments
- →50 Analog Input
- →50 instrument cable(50m each)
- →2500 m instrument cable
- →100 terminal
- →7 analog input card (8 channel each)
- →50 instrument loop diagram
- →Cable list
- →50 cable installtion+50 loop test
- →50 Field calibration
- →...

Case Study

Profibus solution Quantities

- →1 Profibus Matser card
- →250 m Profibus cable
- →51 Connectors
- →1 (loop diagram)
- →

Case Study

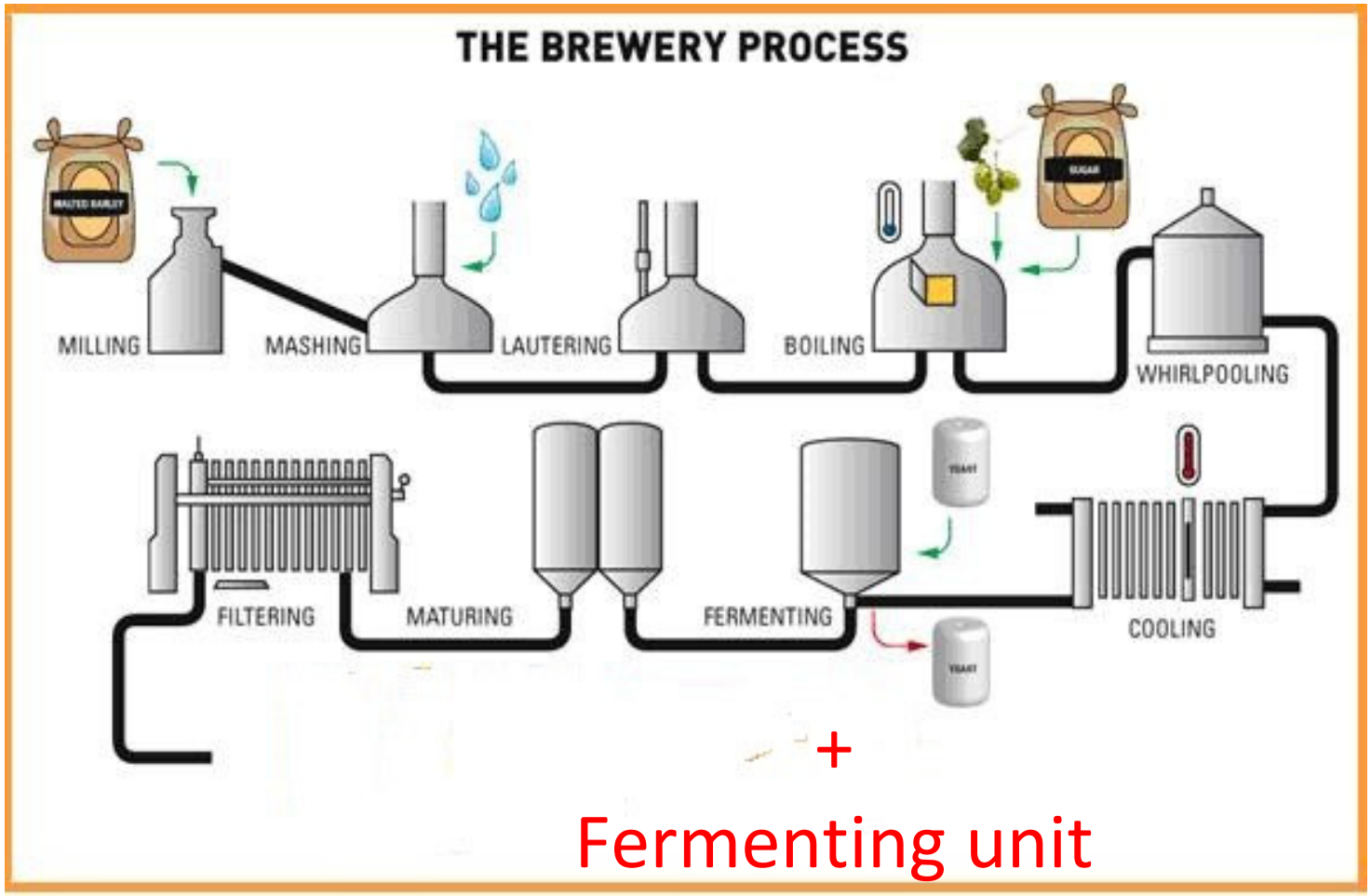
THE BREWERY PROCESS
MILLING
MASHING
LAUTERING
BOILING
WHIRLPOOLING
FILTERING
MATURING
FERMENTING
COOLING
+
Fermenting unit

Case Study

Upgrade of control system

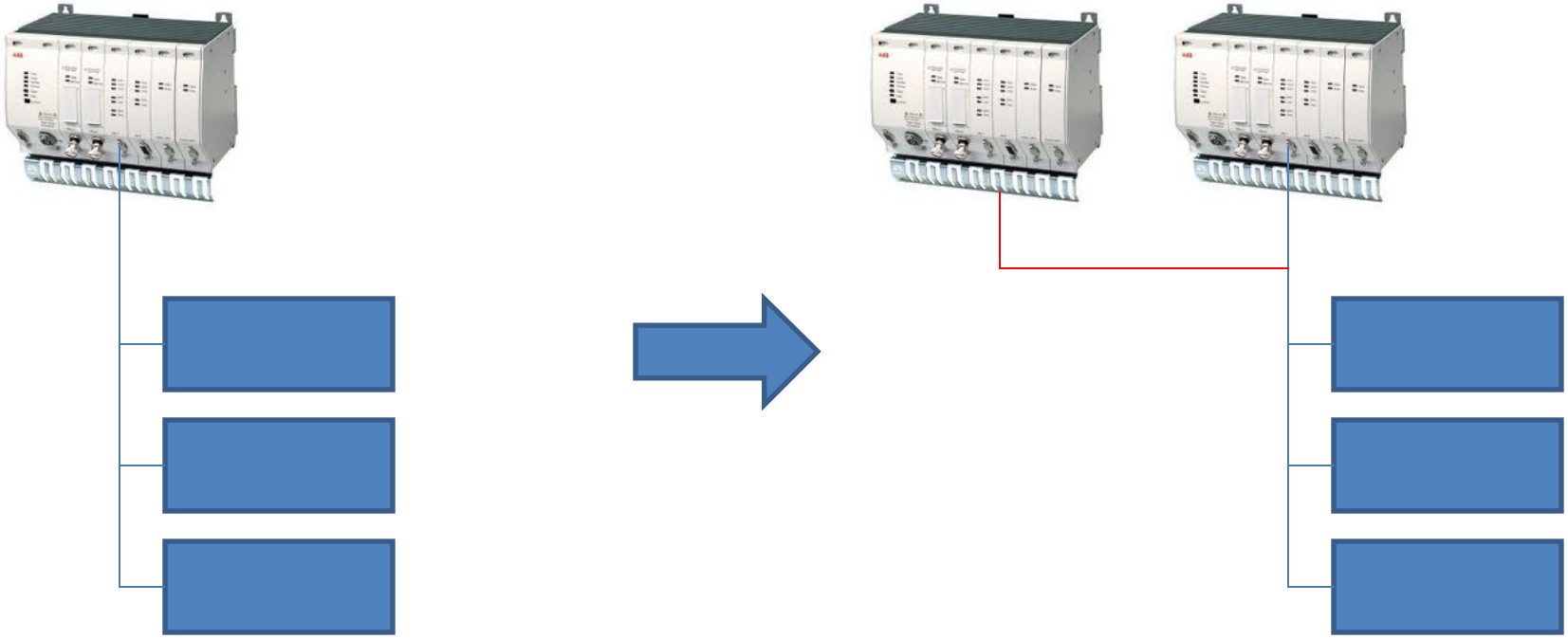

3w technomatic | Engineering the Future

Thank You!

www.technomatic.de | www.3wnetworks.com